## Worm and Worm Gear Parameter Table

| | Worm | Worm Gear |
|---|---|---|
| Module | 0.4 | |
| Number of Starts/ Number of Teeth | 1 | 17 |
| Pressure Angle | 20° | 20° |
| Tip Diameter | 5 | 7.6 |
| Reference Diameter | 4.2 | 6.8 |
| Lead Angle | Right-hand 5.44° | |
| Worm Lead | 1.257 | - |
| Worm Pitch | 1.257 | - |
| Addendum Coefficient | 1 | 1 |
| Clearance Coefficient | 0.25 | 0.25 |
| Modification Coefficient | - | - |
| Transmission Center Distance | 5.55 | |
| Material | SUS416 | 20crmnti |
| Accuracy Class | GB/T 10095-2001 - Grade 8 | |

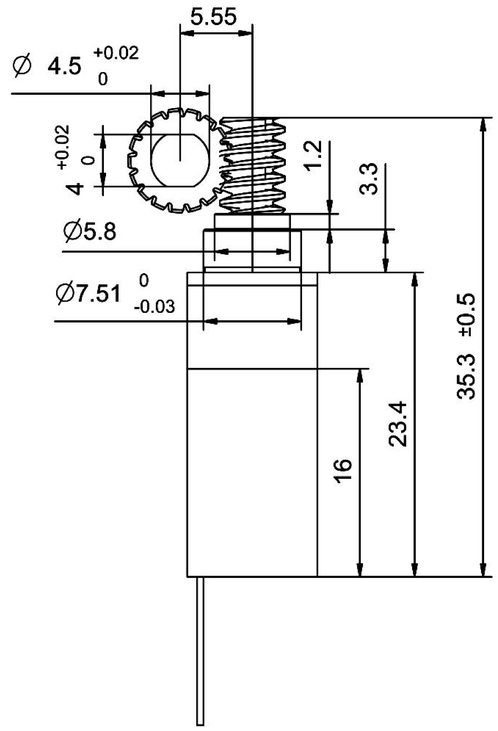


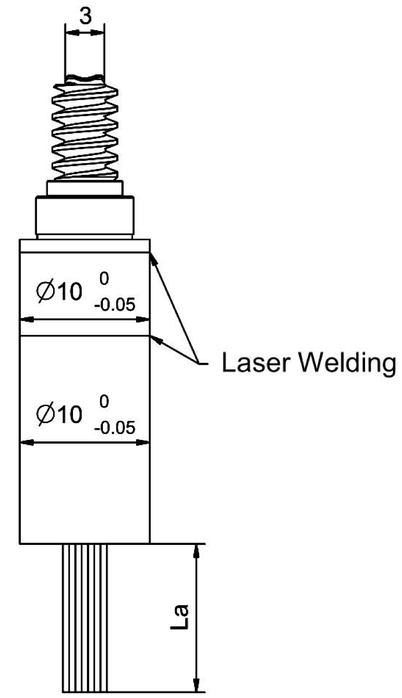


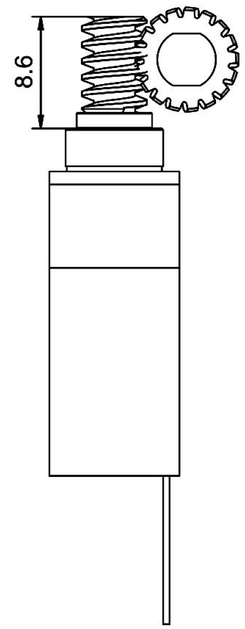


FPC Harness Length La: 70mm

Coreless Brushless Motor:
FPC: 0.5mm-12P
Pin Assignment: PIN1-12
pin1-HALL A
pin2-HALL B
pin3-HALL Z
pin4-3.3V
pin5-GND
pin6+7-Motor U
pin8+9-Motor V
pin10+11-Motor W
pin12-Temp. Ctrl.

Motor Performance Parameters:

1. Motor Type: Coreless Brushless Motor
2. Operating Voltage: 12V
3. No-load Speed: 32000 ±10% RPM
4. No-load Current: ≤0.4A
5. Rated Speed: 20000 ±10% RPM
6. Rated Torque: ≥10 g.cm
7. RatedCurrent: ≤0.6A
8. Pole Pairs: 2 Pole Pairs
9. Operating Temperature: -40-85°C
10. Noise: ≤45 DB
11. Motor Maximum Efficiency: 75%

Gearmotor Performance Parameters:

1. Operating Voltage: 12V
2. No-load Speed: 65 ±10% RPM
3. No-load Current: ≤0.3A
4. Rated Speed: 40 ±10% RPM
5. Rated Torque: ≥0.25NM
6. Rated Current: ≤0.6A
7. Peak Torque (2s): 0.6 N.m
8. Peak Current: ≤1A
9. Operating Temperature: -40-80°C
10. Reduction Ratio: 1:476
    (Planetary Stage 1:28, Worm and Worm Gear Stage 1:17)
11. Worm and Worm Gear Self-locking Torque: ≥2 NM
12.. Noise: ≤55 DB
13. Gearbox Material: Pure Steel (Machined)

| | |
|---|---|
| Design | |
| Reviewed | |
| Approved | |
| Date | 2026.01.20 |

First Angle Projection

General tolerances for untoleranced linear and angular dimensions: GB/T 1804-m eqv ISO 2768-1:m

10mm Planetary Gearbox+10mm Coreless Brushless Motor+Worm and Worm Gear Reducer Gearbox (Product Type)

PG10K28-KW1016+LG04M17Z (Actuator 1) (Product Model)

Tsinglin Micro Motors Limited