Worm and Worm Gear Parameter Table

	Worm	Worm Gear
Module	0.4	
Number of Starts/ Number of Teeth	1	20
Pressure Angle	20°	20°
Tip Diameter	5	8.8
Reference Diameter	4.2	8
Lead Angle	Right-hand 5.44°	
Worm Lead	1.257	-
Worm Pitch	1.257	-
Addendum Coefficient	1	1
Clearance Coefficient	0.25	0.25
Modification Coefficient	-	-
Transmission Center Distance	6.1	
Material	20crmnti	
Accuracy Class	GB/T 10095-2001 - Grade 8	

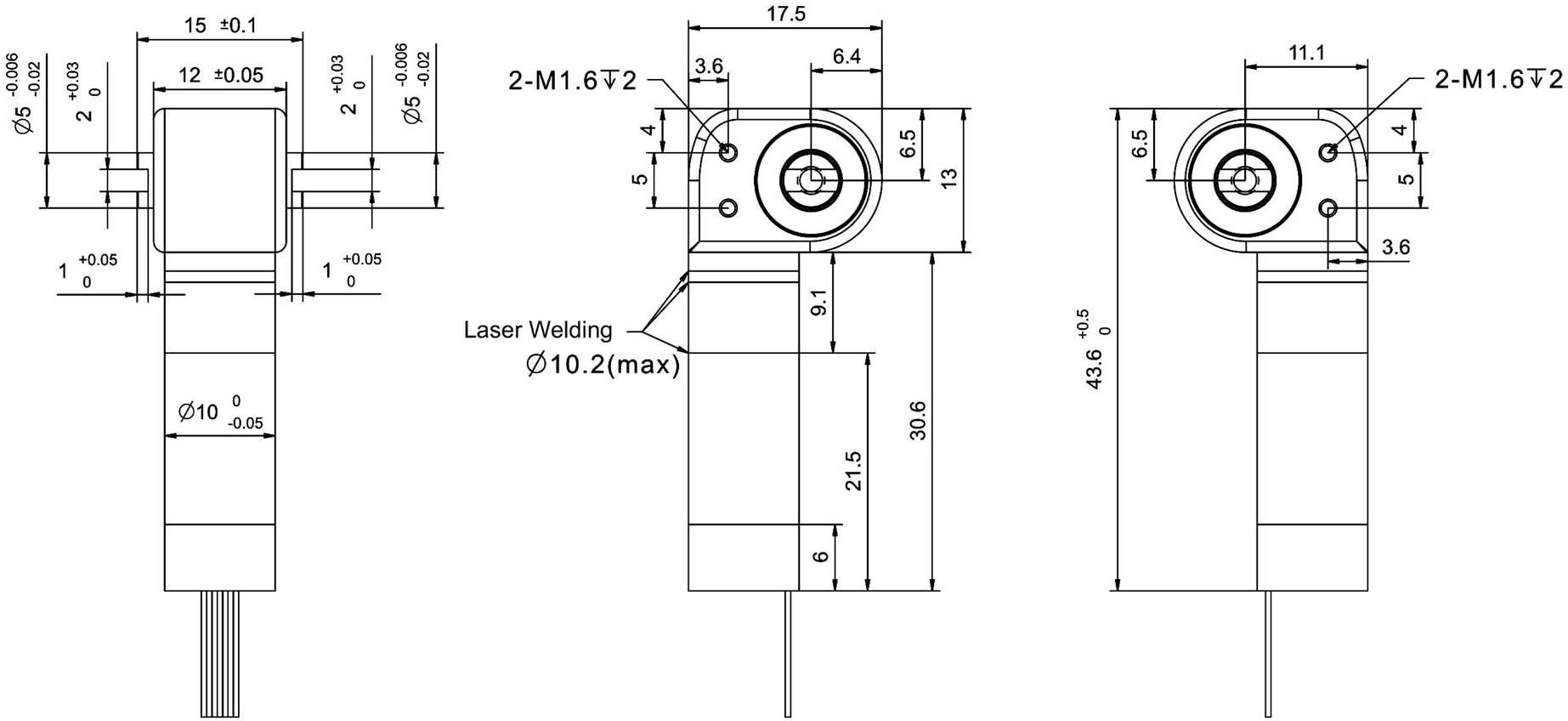

Encoder + Driver: pin1-4 wire

pin1:VDD
pin2:GND
pin3:RXD
pin4:TXD

Motor Performance Parameters:

1. Motor Type: Coreless Brushless Motor
2. Operating Voltage: 12V
3. No-load Speed: 32000 ±10% RPM
4. No-load Current: ≤0.15A
5. Rated Speed: 18000 ±10% RPM
6. Rated Torque: ≥10 g.cm
7. RatedCurrent: ≤0.5A
8. Pole Pairs: 2 Pole Pairs
9. Operating Temperature: -40-85°C
10. Noise: ≤45 DB
11. Motor Maximum Efficiency: 75%

Gearmotor Performance Parameters:

1. Operating Voltage: 12V
2. No-load Speed: 55 ±10% RPM
3. No-load Current: ≤0.2A
4. Rated Speed: 35 ±10% RPM
5. Rated Torque: ≥800 g.cm
6. Rated Current: ≤0.5A
7. Operating Temperature: -40-80°C
8. Reduction Ratio: 1:560 (Planetary Stage 1:28, Worm and Worm Gear Stage 1:20)
9. Noise: ≤55 DB
10. Gearbox Material: Pure Steel (Machined)

Design	
Reviewed	
Approved	
Date	

First Angle Projection

General tolerances for untoleranced linear and angular dimensions: GB/T 1804-m eqv ISO 2768-1:m

10mm Planetary Gearbox+10mm Coreless Brushless Motor+Encoder-Driver Integrated Unit+Worm and Worm Gear Reducer Gearbox (Product Type)

PG10K28-KW1016+LG13175K20 (Product Model)

Tsinglin Micro Motors Limited