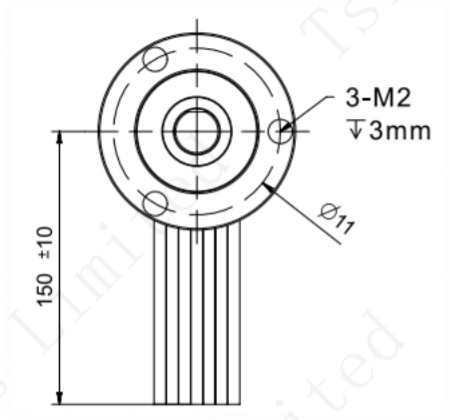

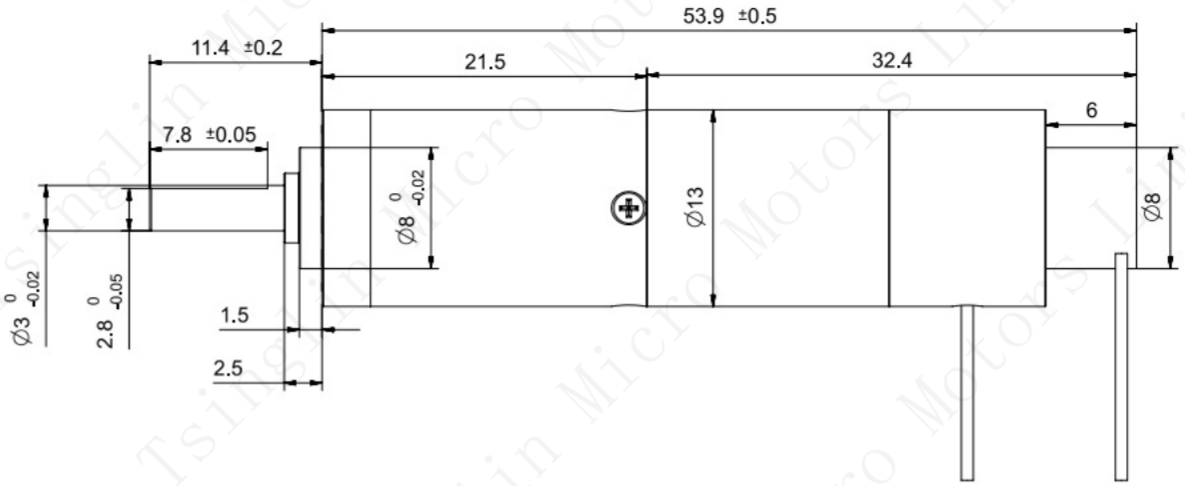

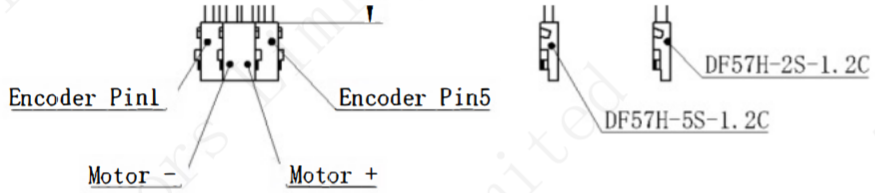

Connetion Encoder	
No.	Function
PIN 1	Z
PIN 2	B
PIN 3	A
PIN 4	Vcc(3.3~5.0V)
PIN 5	GND

Motor Performance Parameters

1.Motor Type: Coreless Brushed Motor
2.Operating Voltage: 12 V
3.No-load Speed: 22000 ± 10% RPM
4.No-load Current: ⩽ 80 mA
5.Load Speed: 20000 ± 10% RPM
6.Load Torque: ⩾ 11 g·cm
7.Load Current: ⩽ 1 A
8.Stall Torque: ⩾ 120 g·cm
9.Stall Current: ⩽ 3 A
10.Number of Pole Pairs: 1 pair
11.Operating Temperature: -40℃ ~ 85℃
12.Noise Level: ⩽ 45 dB
13.Maximum Motor Efficiency: 75%

Gear Motor Performance Parameters

1.Operating Voltage: 12V
2.No-load Speed: 85 ± 10% RPM
3.No-load Current: ⩽ 100 mA
4.Load Speed: 75 ± 10% RPM
5.Load Torque: ⩾ 0.2 Nm
6.Load Current: ⩽ 1 A
7.Operating Temperature: -40℃ ~ 80℃
8.Gear Ratio: 1:256
9.Noise Level: ⩽ 55 dB
10.Gearbox Material: Solid Steel (Machined)

Magnetic Encoder, Digital Output, 3 Channels, 4096 PPR

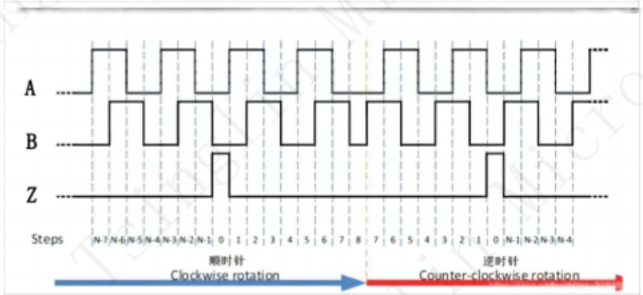

设计		第一视觉画法	13mm planetary gearbox + 13mm coreless brushed motor + Magnetic Encoder (Product Model)
审核			TSL-PG13K256-KS1320+MA4096 (Product Model)
批准		未注线性与角度尺寸公差：GB\T1804-m eqv ISO 2768-1:m	Tsinglin Micro Motors Limited
日期	2026.06.03		